GENERATED FROM P/N:

REVISIONS						
ECN	ZONE	LTR	DESCRIPTION	DATE	CHG	CHK
~						

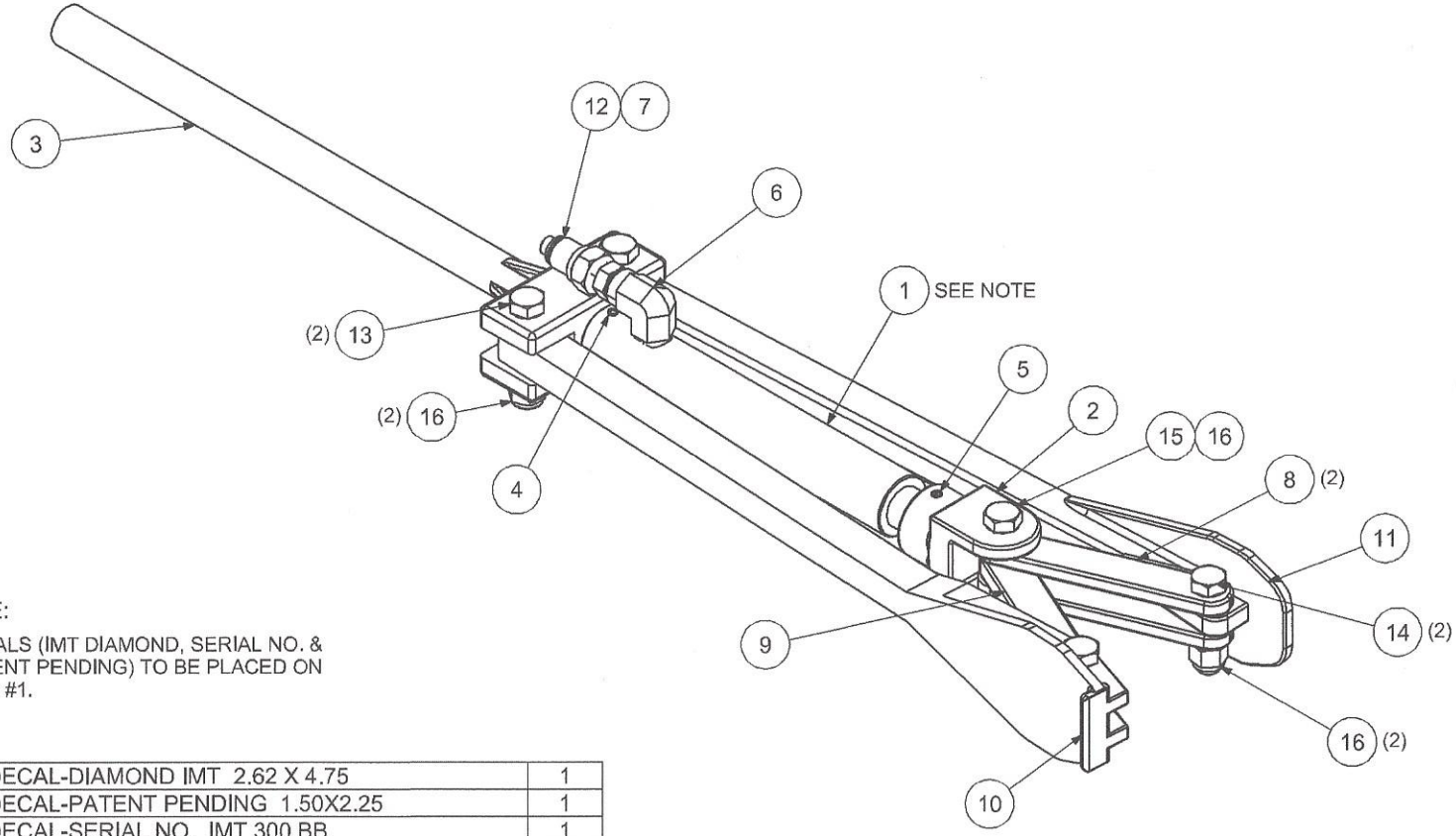

NOTE:

DECALS (IMT DIAMOND, SERIAL NO. & PATENT PENDING) TO BE PLACED ON ITEM #1.

ITEM	PART NUMBER	DESCRIPTION	QTY
19	70391456	DECAL-DIAMOND IMT 2.62 X 4.75	1
18	70392311	DECAL-PATENT PENDING 1.50X2.25	1
17	70392307	DECAL-SERIAL NO. IMT 300 BB	1
16	72062080	NUT .50-13 HEX NYLOCK	5
15	72601369	CAP SCR .50-13X 3.00 HH GR8 Z	1
14	72601368	CAP SCR .50-13X 2.25 HH GR8 Z	2
13	72601296	CAP SCR .50-13X 2.50 HH GR8 Z	2
12	72053546	NIPPLE-DISC .38FPT 10,000 PSI	1
11	70142760	ARM-DUAL BEAD BREAKER (FLAT)	1
10	70142724	ARM-DUAL BEAD BREAKER (W-LIP)	1
9	70142727	PIVOT ARM-IMT 300 BEAD BREAKER .50	1
8	70142726	PIVOT ARM-IMT 300 BEAD BREAKER .38	2
7	72053723	ADPTR-MPT/HEX/MPT .38 .38	1
6	72531132	ELBOW-STREET STL .38 X 90 DEG	1
5	72066734	ROLL PIN .25X1.75	1
4	72066318	ROLL PIN .25X1.50	1
3	70142723	HANDLE-IMT 300 BEAD BREAKER	1
2	70142725	CLEVIS-IMT 300 BEAD BREAKER	1
1	70731611	RAM-IMT 300 BEAD BREAKER	1

Parts List

THIS DRAWING IS THE PROPERTY OF IOWA MOLD TOOLING CO., INC. TRANSMITTED IN CONFIDENCE, AND THE REPRODUCTION, USE OR DISCLOSURE, IN WHOLE OR IN PART, OF THE DESIGN AND DETAILS CONTAINED HEREIN IS PROHIBITED WITHOUT THE WRITTEN PERMISSION OF IOWA MOLD TOOLING CO., INC.

AutoCAD Inventor GENERATED DRAWING

PRODUCT NO. BEAD BREAKER

UNLESS OTHERWISE SPECIFIED: DIMENSIONS ARE IN INCHES. TOLERANCES UNLESS OTHERWISE SPECIFIED:
ANGLE ± 1°
FRACTION ± 1/16
DECIMAL .XX ± .060
DECIMAL .XXX ± .010
DECIMAL .XXXX ± .005

MATERIAL

DRAWN BY palmiejm DATE 12/14/2007

CHECKER DATE

MFG. ENGR. APPROVAL

DESIGN APPROVAL

IOWA MOLD TOOLING CO., INC.
500 HWY 18 WEST
GARNER, IOWA 50438

TITLE
BEAD BREAKER-IMT 300

SIZE C | CAGE CODE | DWG NO. 51705003

SCALE 1:2 | UNIT WT. 23.0# | SHEET 1 OF 1